Block Diagram:

A:

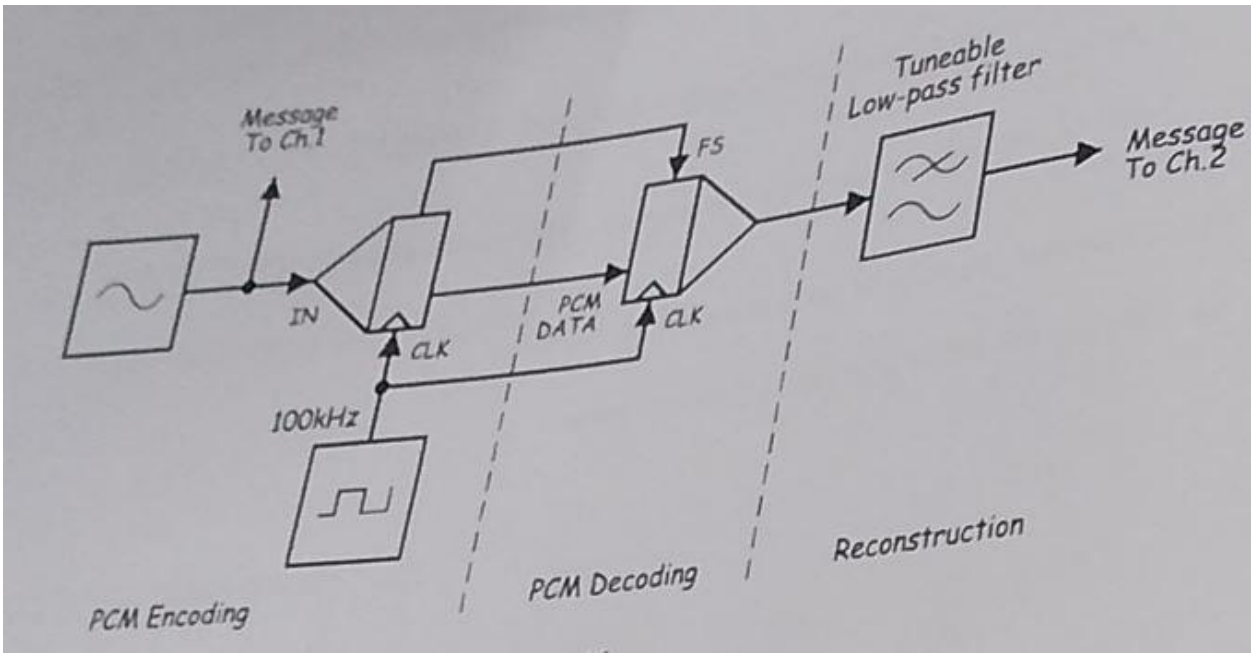

B:

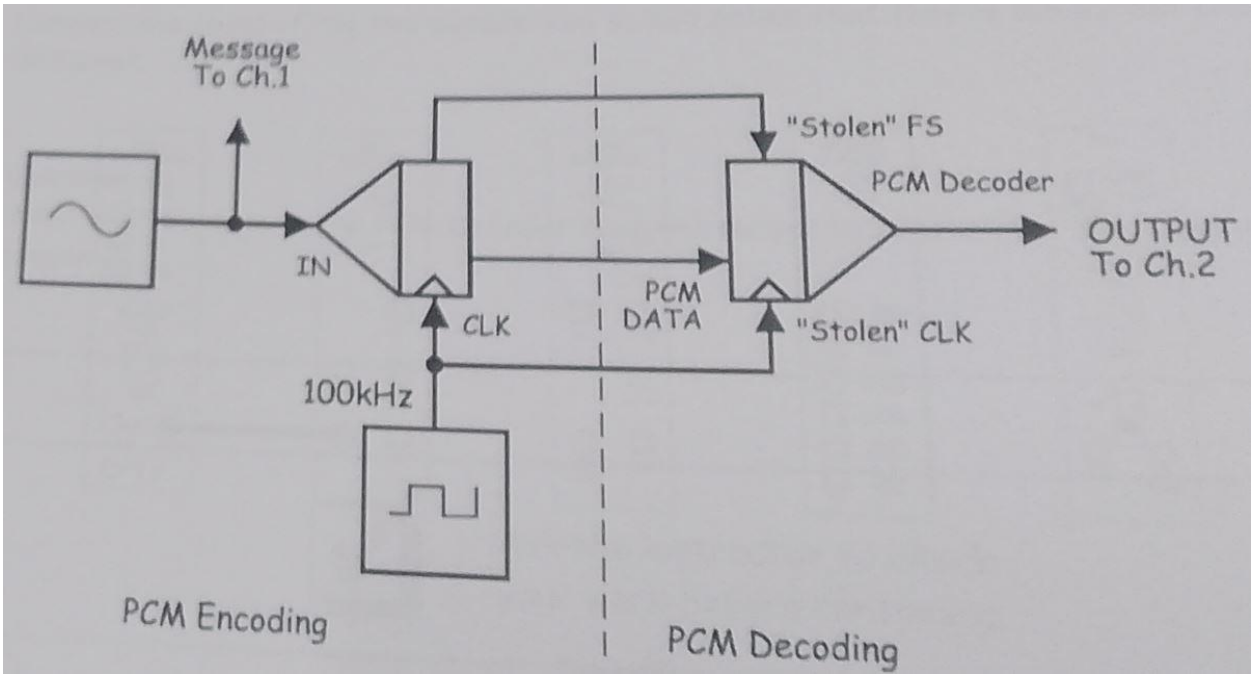

Set Up and Result:

A:

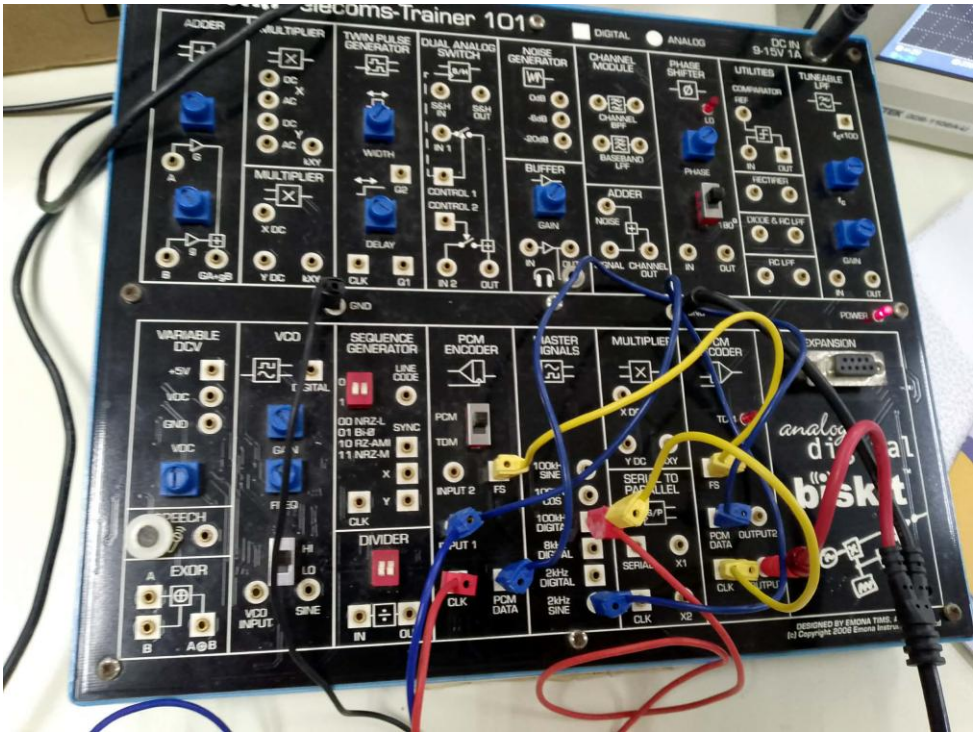

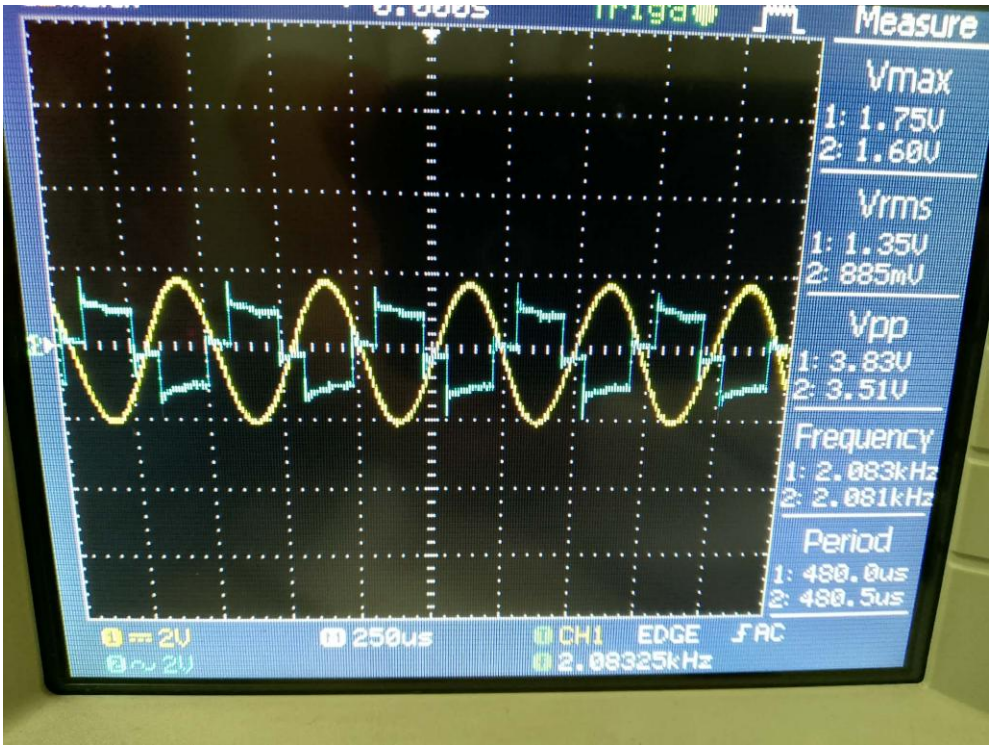

B:

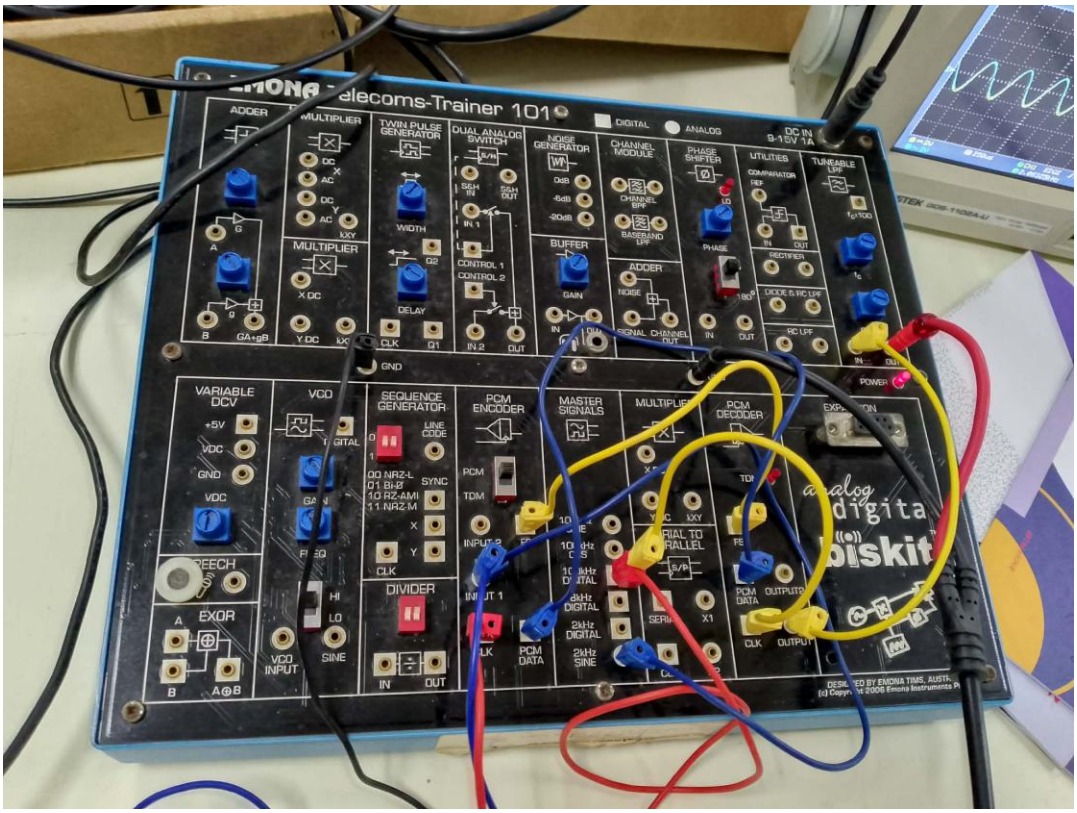
Telecoms-Trainer 101
DIGITAL
ANALOG
DC IN 9-15V 1A
ADDER
MULTIPLIER
TWIN PULSE GENERATOR
DUAL ANALOG SWITCH
NOISE GENERATOR
CHANNEL MODULE
PHASE SHIFTER
UTILITIES
TUNEABLE LPF
BUFFER
GND
VARIABLE DCV
VCO
SEQUENCE GENERATOR
PCM ENCODER
MASTER SIGNALS
PCM DECODER
SPEECH
EXOR
DIVIDER
POWER

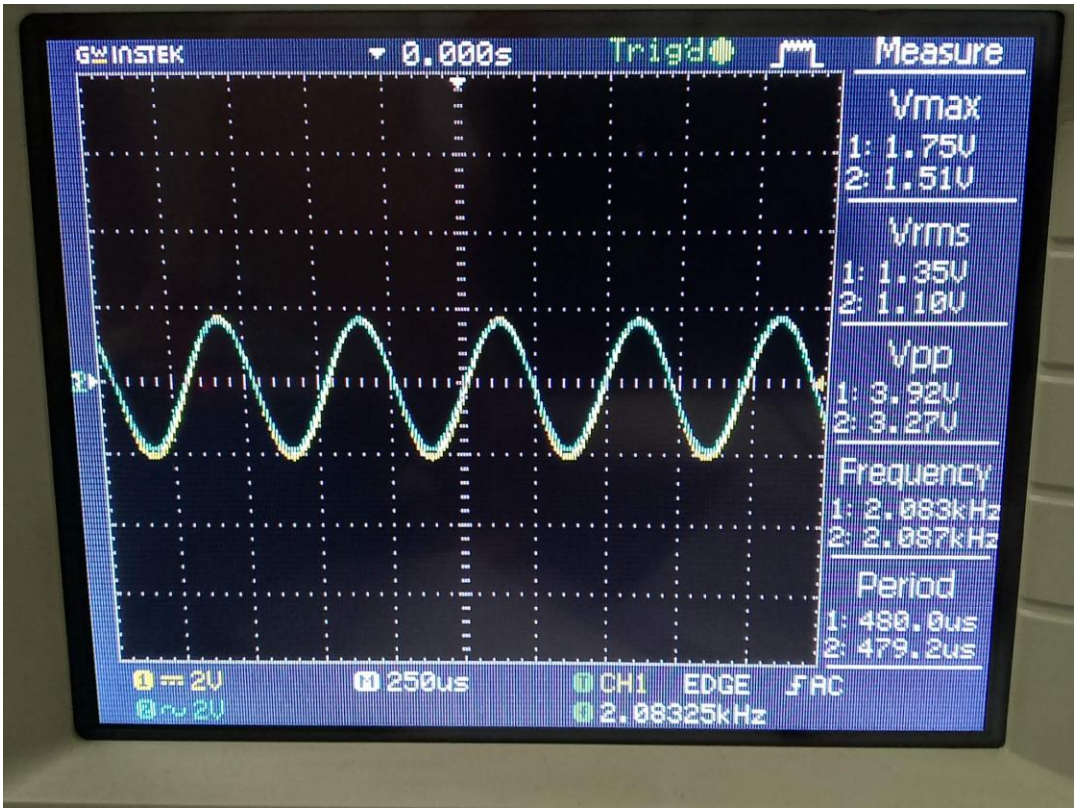
GW INSTEK
0.000s
Trig'd
Measure
Vmax
1: 1.75V
2: 1.51V
Vrms
1: 1.35V
2: 1.10V
Vpp
1: 3.92V
2: 3.27V
Frequency
1: 2.088kHz
2: 2.087kHz
Period
1: 480.0us
2: 479.2us
1 = 2V
2 ~ 2V
250us
CH1 EDGE AC
2.08325kHz